BROUWER

OWNER/OPERATOR'S MANUAL & ILLUSTRATED PARTS LIST

MODEL:

7990302 TURF ROLLER TR-224

WARNING: If incorrectly used this machine can cause severe injury. Those who use and maintain this machine should be trained in its proper use, warned of its dangers and should read the entire manual before attempting to set up, operate, adjust or service the machine.

POWERED by HONDA

Manual No. KM99126

September 2013

4135947 REV A

KESMAC INC.
DBA BROUWER KESMAC
23324 Woodbine Ave.
Keswick, ON L4P 0N1
Phone: (905) 476-6222
Fax: (905) 476-6744
Website: www.brouwerkesmac.com

STATEMENT OF LIMITED WARRANTY

Brouwer Kesmac warrants its full line of equipment to be free from defects in material and factory workmanship for a period of 12 months. This warranty begins on the date of sale or use of the equipment to the original purchaser. This statement does not extend or limit engine, tractor or component warranties in which the engine, tractor or component manufacturers may carry extended time periods up to 24 months. Engine, tractor or component warranty claims will be subject to the engine, tractor or components manufacturer's approval.

Replacement Parts carry a 90 day replacement warranty and are reimbursed to the dealer. All electrical and hydraulic parts are limited by this policy and will only be covered upon approval by the service department after inspection of the part. The installation and removal of a part will automatically place that part under the replacement parts warranty.

This warranty is limited exclusively to equipment or accessories manufactured or supplied by ***Brouwer Kesmac*** and are subject to the inspection and analysis by the company to conclusively identify the nature and cause of failure.

PRODUCT REGISTRATION FORM must be completely filled out, signed by the customer at the original date of installation, and returned to ***Brouwer Kesmac*** before any claims will be considered.

Brouwer Kesmac reserves the right to incorporate improvements in material and design of its products without notice and is not obligated to make the same improvements to equipment previously manufactured.

Brouwer Kesmac is not obliged under any warranty policy different from the Kesmac Brouwer Turf warranty policy as published above.

BROUWER KESMAC RESPONSIBILITIES

Brouwer Kesmac's obligation under the terms of this warranty is limited to the repair, replacement or credit, at its option, of the equipment, parts or supply items that conform to its warranty.

DEALER'S RESPONSIBILITIES

1. Only factory-trained service or approved personnel will be permitted to perform warranty service on ***Brouwer Kesmac*** equipment.

2. All major warranty claims exceeding $650.00 (in total including parts and labour) must be authorized by ***Brouwer Kesmac*** before work is performed.

3. All replacement parts used in warranty situations must be furnished by ***Brouwer Kesmac*** or approved by ***Brouwer Kesmac*** personnel. The use of non-recommended oil could nullify warranty.

OWNERS RESPONSIBILITIES

The owner is obligated to operate and maintain the equipment in accordance with the recommendations published by ***Brouwer Kesmac*** in the owners/operators manual for the unit. The owner is responsible for the costs associated with such maintenance and operating adjustments that may be required on a regularly scheduled basis. Where applicable the owner is responsible for transportation to and from the dealership or service calls made by the dealer.

CONDITIONS THAT VOID WARRANTY

This warranty shall not apply to equipment which:

- 1. Has had repairs or modifications not authorized by ***Brouwer Kesmac***
- 2. Has been subject to abuse, improper maintenance, or improper application.
- 3. Has been modified from original equipment specifications.

WARRANTY EXCEPTIONS

This warranty does not apply to the following items:

- 1. Wear items including blades, cutting edges, cutting arms, spark plugs, belts, filters, bearings, sprockets, chains, tires, light bulbs, lubricants and fluids etc. Cost of normal maintenance including replacement of service items.
- 2. Damages to engine/drive systems caused by lack of/or improper lubricants and/or fluids.
- 3. Damages arising from accident, misuse or neglect.
- 4. Damages to engine/drive systems caused by improper operation and/or maintenance.
- 5. ***Brouwer Kesmac*** will not be liable for any incidental or consequential damage or injuries, including but not limited to loss of profits, loss of crops, rental of substitute equipment, or other commercial loss or for damage to the equipment in which the Company Product is installed.

FREIGHT CARRIER DAMAGE

Claims for equipment damaged in transit should be referred to the freight carrier. Visible damage should be reported immediately and concealed damage as soon as possible, in accordance with freight carrier regulations.

BROUWER

Kesmac Inc.
23324 Woodbine Avenue, Keswick Ontario Canada L4P 0N1
Tel (905) 476-6222 Fax (905) 476-6744
Web Site www.brouwerkesmac.com Email info@kesmac.com

Date of Purchase: Month _____Day _____Year _____

Dealer Name _____Phone_____

Serial Number _____

Model Number _____

ALWAYS GIVE THE SERIAL NUMBER, MODEL NUMBER AND PART COLOR WHEN ORDERING SERVICE PARTS.

CALIFORNIA
Proposition 65 Warning

Diesel engine exhaust and some of its constituents are known to the State of California to cause cancer, birth defects and other reproductive harm.

⚠ WARNING

The engine exhaust from this product contains chemicals known to the State of California to cause cancer, birth defects or other reproductive harm.

Californie Proposition 65
Avertissement

Les échappements des moteurs diesel et certains de leurs composés sont reconnus par l'Etat de Californie pour être cancérigènes, provoquer des défauts congénitaux et d'autres dangers en matière de reproduction.

⚠ AVERTISSEMENT

L'émission du moteur de ce matériel contient des produits chimiques que l'Etat de Californie considère être cancérigènes, provoquer des défauts congénitaux et d'autres dangers en matière de reproduction.

California Advertencia
de la Proposicion 65

El estado de California hace saber que los gases de escape de los motores diesel y algunos de sus componentes producen cáncer, defectos de nacimiento y otros daños en el proceso de reproducción humana.

⚠ ADVERTENCIA

El estado de California hace saber que los gases de escape de este producto contienen productos químicos que producen cáncer, defectos de nacimiento y otros daños en el proceso de reproducción humana.

IMPORTANT

Your new Brouwer Turf Roller has been designed and built to give many years of outstanding performance. The service and reliability you receive from this product will be affected by the proper maintenance and operation of the machine.

It is important the operator of the machine follows all recommended operating procedures and service schedules, to ensure the safety of the machine, themselves and any bystanders.
It is not possible to list all situations that may effect the safety of the machine or the operators, therefore Brouwer cannot identify all precautions that may possibly prevent accidents.
The owner/operator must assume responsibility for their own safety, the safety of others and of the machine.

BE A QUALIFIED OPERATOR BY ;

- Reading and obeying the instructions in this manual and on the safety decals on the machine.
- Receiving training on the correct operation of the machine.
- Asking your supervisor or equipment dealer to explain anything you do not understand.
- Explaining the instructions in the operator's manual and safety decals to user/operators who cannot read or understand them.

IF YOU DO NOT UNDERSTAND....ASK

Use only genuine Brouwer replacement parts. Parts not supplied by Brouwer may not meet factory specifications or standards of manufacture. The use of non-approved parts may result in component failure and result in an accident to the operator or bystanders.

The Brouwer **Turf Roller** must not be used for any purpose other than that for which it was designed.
Prior to shipping from the manufacturer the machines are inspected to insure that all safety guards, shields and warning/safety/operating decals are correctly positioned and secure.
The machine must not be used if any of the above items are missing or damaged.

TABLE OF CONTENTS

	FIGURES	PAGE
INTRODUCTION / SPECIFICATIONS		2
SAFETY		3, 4
PRE - START INSTRUCTIONS		5, 6
OPERATION		8, 9
SERVICE		10-14
PARTS SECTION		15
FRONT FRAME ASSEMBLY	FIGURE 1	16, 17
DRIVE PARTS	FIGURE 2	18, 19
REAR FRAME ASSEMBLY	FIGURE 3	20, 21
ENGINE & TRANSMISSION DRIVE PARTS	FIGURE 4	22, 23
ENGINE WIRING	FIGURE 5	24, 25
TRANSMISSION PARTS	FIGURE 6	26, 27
DECALS	FIGURE 7	28, 29

DESCRIPTION

The TR224 is the ideal turf roller for Landscapers, Rental outlets and other contractors. The 24 inch wide rollers, specially designed to prevent turf damage, and its exceptional maneuverability make the TR224 most suitable for lawn rolling, turf installation and other rolling tasks.

A reliable Honda engine drives through a field-proven clutchless transmission that shifts effortlessly from forward to reverse with a single lever. The unique steering design, comfortable seat and driving position reduce operator fatigue.

The Brouwer Turf Roller is an outstanding machine that is efficient, reliable, economical and easy to operate.

SPECIFICATIONS

Dimensions:

Overall Length		60" (152 cm)
Overall Width		32" (81 cm)
Overall Height		48-3/4" (124 cm)
Weight	Empty	495 lbs. (224 kg)
	Loaded	1107 lbs. (502 kg)
Front Roller		24" diameter (61 cm)
		24" wide (61 cm)
Rear Roller		18" diameter (46 cm)
		24" wide (61 cm)

Engine:

Honda	5-1/2 hp

Drive Train:

Speed	0 - 4.2 mph
Transmission	Clutchless Twin Planetary
	F - N - R Single Lever Shift

Steering:

Steering	Handle Bar with Lever Assist

⚠ WARNING

Unauthorized modifications may result in **extreme** safety hazards to operators and bystanders, and could result in damage to the machine.

Brouwer Turf Ltd. warns against and strongly rejects and disclaims against any modifications, add-on accesories or product modifications that are not designed, developed, tested, and approved by Brouwer Engineering Department.

Any Brouwer product that is altered or modified in anyway that is not authorized, after original manufacture, including after market accessories or component parts that are not approved by Brouwer, will result in the machine warranty be voided.

All liability for personal injury and/or property damage caused by any unauthorized modifications, add-on accessories or products not approved by Brouwer will be considered the responsibility of the individual(s) or company designing and/or making such changes.

Brouwer Turf Ltd. will vigorously pursue full indemnification and costs from any party responsible for unauthorized post-manufacture modifications and/or accessories should personal injury and/or property damage result.

This symbol means:
ATTENTION!
BECOME ALERT!

Your safety and the safety of others is involved.

Signal word definitions:

The signal words below are used to identify levels of hazard seriousness. These words appear in this manual and on the safety labels attached to Brouwer machines. For your safety and the safety of others, read and follow the information given with these signal words and/or the symbol shown above.

⚠ DANGER

DANGER indicates an imminently hazardous situation which, if not avoided, **WILL** result in death or serious injury.

⚠ WARNING

WARNING indicates a potentially hazardous situation which, if not avoided, **COULD** result in death or serious injury.

⚠ CAUTION

CAUTION indicates a potentially hazardous situation which, if not avoided, **MAY** result in minor or moderate injury. It may also be used to alert against unsafe practices or property damage.

CAUTION

CAUTION used without the safety alert symbol indicates a potentially hazardous situation which, if not avoided, **MAY** result in property damage

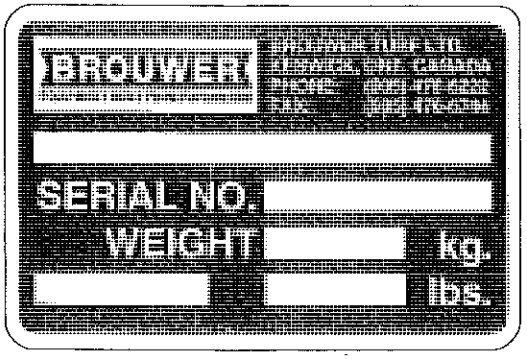

MODEL NUMBER :
This number appears on sales literature, technical manuals and price lists.

SERIAL NUMBER:
This number applies only to the machine to which it is allocated.
The serial number must be quoted when ordering parts or calling for service or warranty advice.
The serial number plate is located on the Lower Right Hand Door Frame.

GENERAL SAFETY

- Read and understand the owner's manual, before attempting to operate this machine.
- Operate all controls from the operator's seat, (if so equipped). **NO RIDERS.**
- Keep all shields in place and safety switches adjusted properly.
- Do not leave equipment unattended. "STOP" the engine and remove the key (if so equipped).
- Do not allow minors or the inexperienced to operate this machine.
- Never allow anyone to operate or service this machine while under the influence of alcohol or drugs.
- Keep people and pets a safe distance away from machines using power driven attachments. Injury could result from flying debris.
- Wear all the necessary protective clothing and personal safety devices to protect your head, eyes, ears, hands, and feet.
- Operate the machine only in daylight or in good artificial light.

⚠CAUTION

- Do not run engine at excessive speeds.
- Keep operator's feet on the footplate provided.
- Do not adjust or perform any maintenance while the unit is running.
- If a malfunction occurs, cease operation and "STOP" the engine.
- Do not operate this machine on slopes greater than 20 degrees. Exercise caution when operating across the side of a slope. Reduce engine speed to the lowest possible operable speed. If the slope is too steep (20 degrees incline or more), the machine may tip over causing personal injury and machine damage.
- To prevent accidental movement of the machine when it is unattended, ensure it is parked on level ground and the shift lever is engaged. Place blocks under the rollers.

BEFORE STARTING:

1. READ SAFETY DECALS.
2. Check engine and transmission oil levels.
3. Visually check for loose or missing parts or bolts.
4. Fill with clean fuel.

STARTING INSTRUCTIONS:

1. Position the machine on a level surface. If necessary, place blocks under the rollers to prevent machine moving inadvertently.
2. Move the shift lever into the "NEUTRAL" position.
3. Turn the fuel valve to the "OPEN" position.
4. Move the choke lever to the "CLOSE" position.

NOTE: The choke may not be needed if the engine is warm.

5. Move the throttle lever to a "slightly open" position.
6. Turn the engine switch to the "ON" position.
7. Pull the recoil starter grip lightly until resistance is felt, then pull briskly.

NOTE: Return it slowly to prevent damage to the starter mechanism.

8. As the engine warms up, gradually move the choke lever to the "OPEN" position.
9. Position throttle for the desired engine speed.

⚠CAUTION

NEVER USE ETHER AS A STARTING AID, OR SEVERE DAMAGE TO ENGINE MAY OCCUR.

⚠DANGER

NEVER FILL FUEL TANK WITH ENGINE RUNNING!

SPECIFICATIONS FOR FUELS AND OILS:

ENGINE OIL
Fill the crankcase with oil that meets API service designation SF, SF/CC, or SF/CD. Do not mix brands or grades of oil. Recommended weight for general all temperature use is:

SAE 10W-30

FUEL
Use clean, fresh, regular or unleaded fuel. Use of unleaded fuel results in less maintenance.

FILLING THE ROLLERS WITH WATER

1. Position the unit on level ground with the roller fill/drain plugs at highest/lowest position.
2. Remove both drain plugs from each roller.
3. Screw a garden hose attachment into the lower hole and fill the roller with the required amount of water.
4. Re-fit top most plug.
5. Disconnect water hose and quickly replace the lower plug.

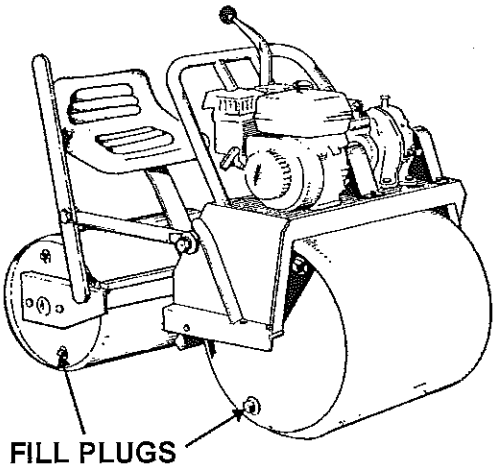

FEATURES AND CONTROLS

1. Steering assist lever
2. Honda engine
3. Transmission
4. 24" Wide rollers
5. Special 'rounded edge' rollers
6. Articulating joint
7. F-N-R Shift lever
8. Transmission reverse band adjustment
9. Operator seat
10. Roller scrapers
11. Throttle control
12. Two fill/drain plugs per roller

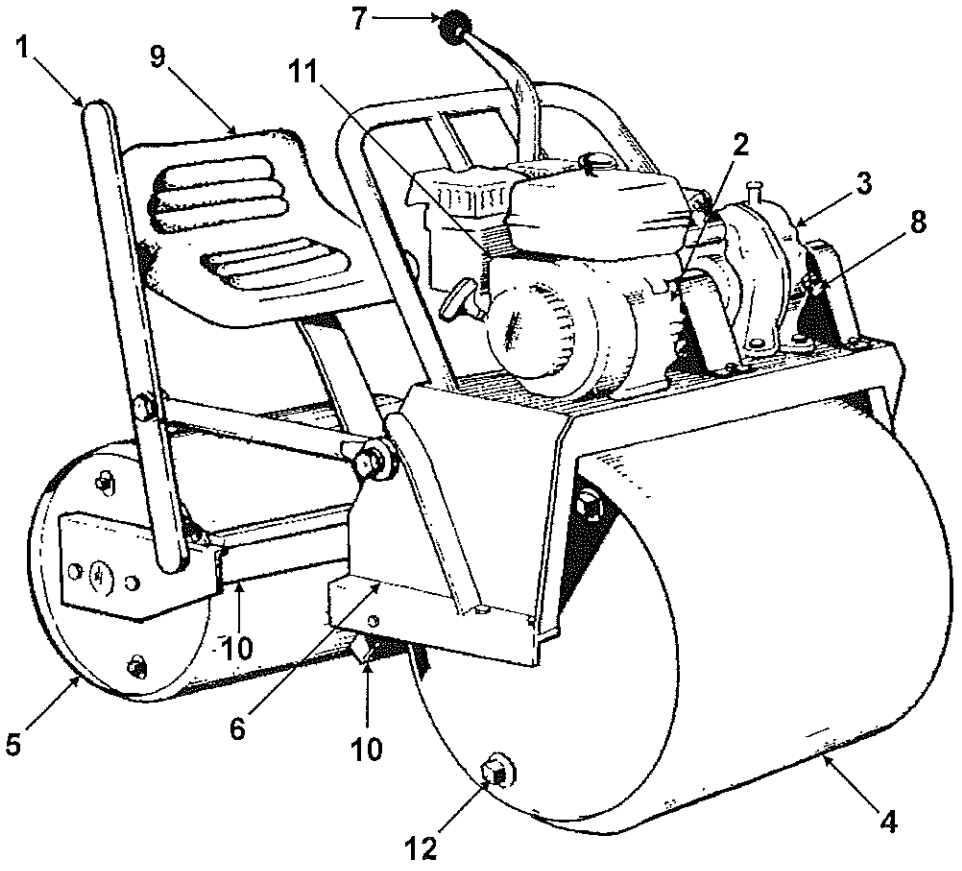

For engine operating instruction and maintenance procedures, refer to the engine manufacturer's owners manual supplied with the unit.

⚠ CAUTION

Before starting the engine, ensure the shift lever is in the neutral position. Failure to do so could result in the machine moving unexpectedly causing personal injury and/or machine damage.

OPERATING INSTRUCTIONS:

1. Position the machine on a level surface. If necessary place blocks under the rollers to prevent machine from moving inadvertently.
2. Move the shift lever into the "NEUTRAL" position.
3. Turn the fuel valve to the "OPEN" position.
4. Move the choke lever to the "CLOSE" position.

NOTE: The choke may not be needed if the engine is warm.

5. Move the throttle lever to a "slightly open" position.
6. Turn the engine switch to the "ON" position.
7. Pull the recoil starter grip lightly until resistance is felt, then pull briskly.

NOTE: Return it slowly to prevent damage to the starter mechanism.

8. As the engine warms up, gradually move the choke lever to the "OPEN" position.
9. Position throttle for the desired engine speed.

⚠CAUTION

Do not operate this machine on slopes greater than 20°. Reduce engine speed to lowest possible operable speed when negotiating slopes. Rollers must be filled with water before operating on any slope.

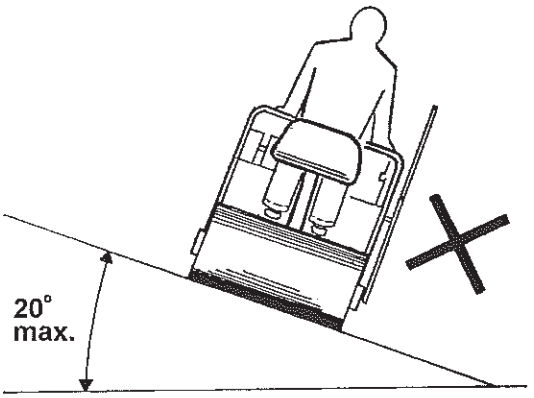

FORWARD / REVERSE OPERATION

Remove any blocks from under rollers.

To move forward:

- Push the shift lever (1) into "FORWARD" position.

To move in reverse:

- Pull the shift lever (1) into "REVERSE" position.

To STOP/PARK the machine:

- The shift lever can be moved from "FORWARD" to "REVERSE" (or vice versa) quickly to provide braking action. When at a complete stop, select "NEUTRAL", switch the engine "OFF" and close fuel valve. With the engine stopped, select "FORWARD" or "REVERSE".

⚠CAUTION

When the machine is left unattended, position blocks under the rollers to prevent accidental movement.

LUBRICATION

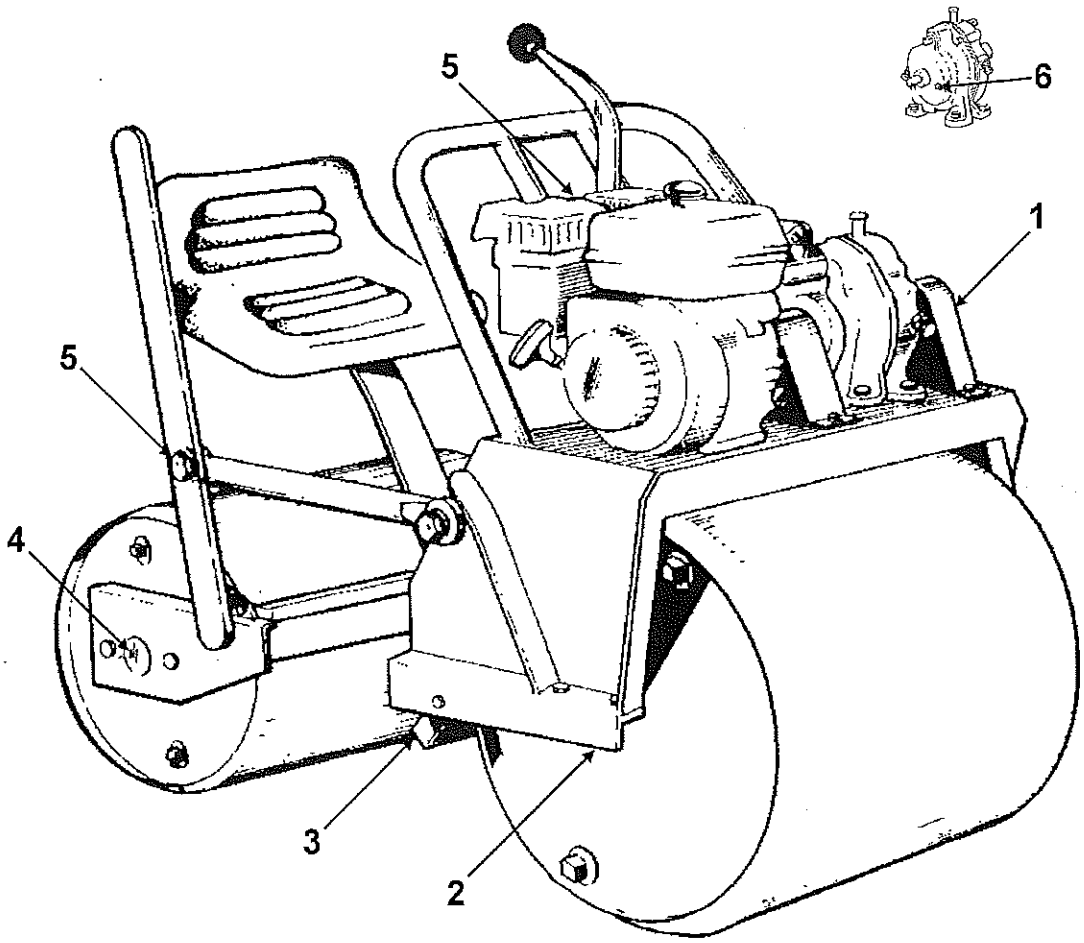

1. SAE 30 motor oil to roller drive chains. DO NOT grease. 20
2. *Grease both bearings on front roller. 20
3. *Grease articulated joint. 20
4. *Grease both bearings on rear roller. 20
5. Light oil to shift lever linkage and steering assist lever ball joints. 40
6. Check transmission oil level. (SAE 30) 20

*Use lithium based grease.

NOTE: Refer to the engine manufacturer's owners manual for the service and lubrication schedule for the engine.

CHAIN ADJUSTMENT:

After each 100 hours of operation check the chain tension. There should be 1/4" deflection at location **A**. To increase the chain tension: Loosen nut **1** and push idler assembly in it's mounting slot in the direction of location **B**. Tighten the nut. Re-check chain deflection.

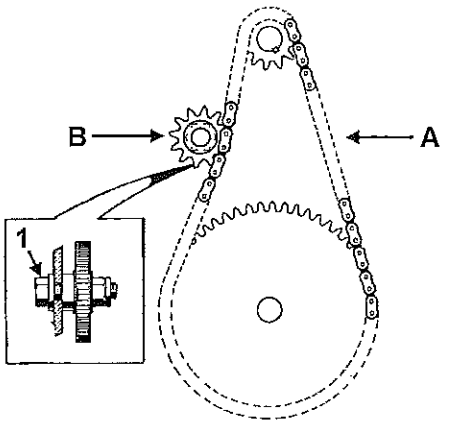

SEAT:

The operator may adjust the seat fore and aft by loosening the mounting bolts **2**. Reposition seat and tighten bolts **2**.

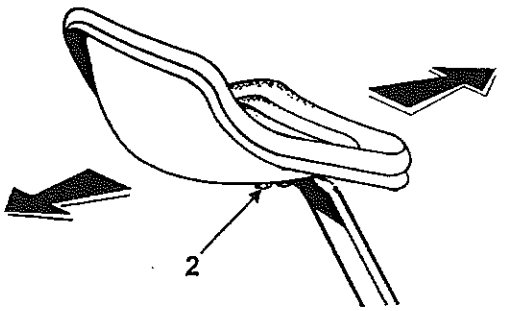

STORAGE INSTRUCTIONS

DAILY / SHORT TERM STORAGE:

- Check the engine oil level and air filter element as recommended in the engine manufacturers manual.
- Close the fuel flow valve.
- Clean the rollers.
- Park on a level surface. Engage "REVERSE" gear. Place blocks under rollers.

EXTENDED STORAGE (More than 30 days):

- Drain all fuel from the fuel tank and lines. Use a hose or fuel line attached to the fuel shut-off valve to drain the fuel into a suitable container.
- Start the engine and run it until all fuel is used.
- Prepare the engine in accordance with the recommendations in the manufacturer's owner's manual.
- Thoroughly clean the machine of all dirt and grass. Lubricate as shown in the lubrication instructions.
- Park on a level surface. Engage "REVERSE" gear. Place blocks under rollers.
- Whenever possible, store the unit in a suitable enclosure or cover with a tarp.

NOTE: When there is a risk of water freezing, empty the rollers. Failure to do so may result in damage to the rollers.

RETURNING TO SERVICE

- Remove tarp and if stored inside, select "NEUTRAL" and push to an open, level, well ventilated area.
- Select "REVERSE" gear.
- Fill the fuel tank with the grade of fuel recommended in the engine manufacturer's owner's manual.
- Check the engine crankcase oil level as shown in the engine manufacturer's owner's manual.
- Check the transmission oil level. Refer to Page 14.
- Check for fuel and oil leaks.
- Lubricate as shown in the lubrication instructions.
- Refill the rollers with water as required, temperature permitting.
- Select "NEUTRAL" and start the engine.

TRANSPORT INSTRUCTIONS

- When transporting the unit by truck or trailer, drain the water from the rollers.
- Load on a low bed trailer using "shallow angle" ramps. Rubber/corrugated ramp surfaces are recommended.
- Drive the machine on to the trailer, with a helper pushing the unit up the ramps.
- Switch the ignition switch to the "OFF" position.
- Ensure the fuel valve is in the "CLOSED" position.
- Ensure the transmission lever is positioned in "REVERSE".
- Securely block the rollers to prevent the machine from moving.
- Use tie-down straps or chains to prevent the machine from moving.

TRANSMISSION SERVICE AND ADJUSTMENT INSTRUCTIONS

ADJUSTMENTS:

The forward and reverse clutches are adjusted externally with the screws which project from both sides of the case. Adjust one clutch at a time. Loosen the jam nut. Turn in the adjusting screw a fraction of a turn if more tension is desired. Turn out the adjusting screw for less tension. Test the adjustment by moving the operating lever towards its respective adjusting screw. Tighten the jam nut.

Do not tighten clutches excessively since this only increases the operating effort without improving clutch action and may result in damaged brake bands. Occasionally, during cold weather operation, the clutches may slip even though correctly adjusted. In such a case, the lubricant must be changed to a lighter grade as specified in lubrication instructions.

LUBRICATION:

QUALITY OF OIL - Use a good grade of straight mineral oil: SAE 30 above 32°F; SAE 10 below 32°F.

Examples of recommended lube oils: Esso Lube Motor Oil; Gulf Lube Motor Oil; Quaker State Non-detergent Motor Oil (ML MM), or equivalent.

Fill unit with lubricating oil through breather hole on top of unit until oil flows from oil level hole on either side. Sometimes oil will follow the internal parts and oil will flow out the oil level holes before the unit is filled with oil to the level holes. Be sure unit is filled to oil level hole.

TRANSMISSION OIL CHANGE:

1. The transmission should be drained and refilled after the first 30 hours of operation.

2. After the initial oil change, change oil every 100 hours or every six months whichever occurs first, for units operating under favorable conditions.

3. Where operating conditions are severe, such as rapid rise and fall in temperature of the gear case with accompanied condensation on the inside walls and resulting formation of sludge, or where operation is in moist or dusty atmospheres, or in the presence of chemical fumes, it may be necessary to change the oil at intervals of one to three months.

REPLACEMENT OF PARTS:

Should it become necessary to replace any gear due to wear or breakage, the mating gears must be carefully examined for wear or cracks. If any doubt exists as to the condition of the mating gears, they should be replaced. All gearing is sold complete with bearing and bushings installed.

The sintered bushings and needle bearings used in this transmission requires special assembly and sizing tools as specified by the respective manufacturers. Therefore, the replacement of these parts should not be attempted unless proper equipment is available.

ILLUSTRATED
PARTS LIST

FRONT FRAME ASSEMBLY

TURF ROLLER

FIGURE 1

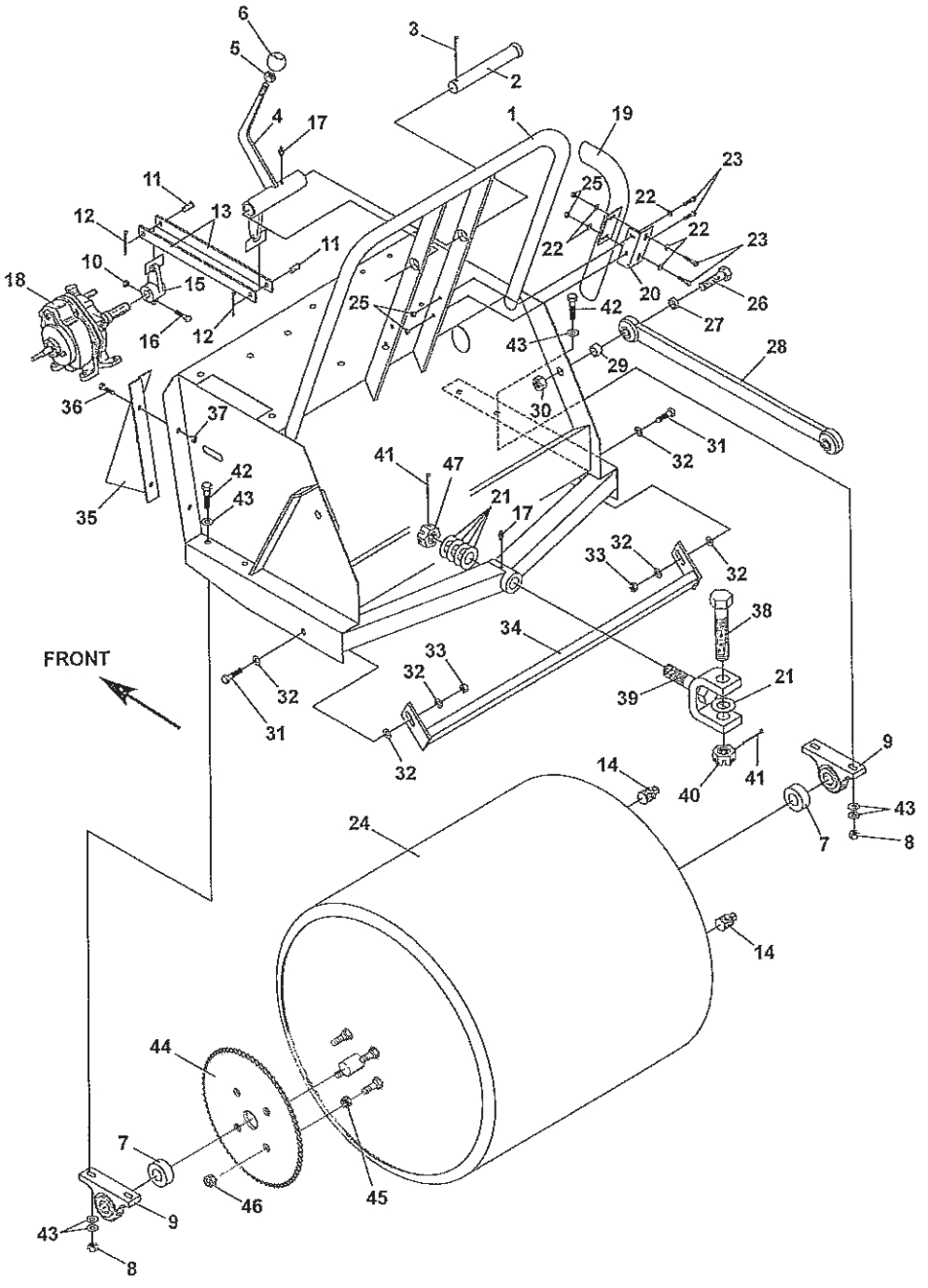

TURF ROLLER

FRONT FRAME ASSEMBLY

FIGURE 1

ITEM	PART NO.	DESCRIPTION	QTY
1-1	301876.7	FRAME, FRONT	1
	04-010	INSERT,5/16-18	4
1-2	301829	PIN, F-N-R LEVER	1
1-3	02-CP0612	COTTER PIN, 3/16 X 1-1/2	1
1-4	301783.7	LEVER WLDMT-FWD-REV	1
1-5	64001-8	NUT-HEX JAM,1/2-13	1
1-6	M5240	KNOB	1
1-7	L6015	SET COLLAR	2
1-8	64229-04	S LOCKNUT-NYLN 7/16-14	4
1-9	B1108	BEARING	2
1-10	64229-02	LOCKNUT-NYLON 5/16-18	2
1-11	03-0608	CLEVIS PIN, 3/8 X 1	2
1-12	64140-1	COTTER PIN-1/8X1	2
1-13	350021.7	ROD-CONNECT FWD & REV	2
1-14	H8030	PLUG, 3/4"	2
1-15	301784.7	ARM-TRANS CONTROL	1
1-16	64123-47	BLT-HEX 5/16-18X1-1/4	1
1-17	29-010	S/B GREASE FITTING	2
1-18	D8054	TRANSMISSION	1
1-19	301875.7	PIPE-ADJ EXHAUST	1
1-20	301873.7	MOUNT, EXHAUST PIPE	1
1-21	64163-64	WSHR 1.015X1.500X14GA	5
1-22	64163-03	WSHR-.256ID X.62OD X 18	5
1-23	64123-114	BOLT-HEX 1/4-20X1	4
1-24	301881	ROLLER-FRONT	1
1-25	64141-2	NUT-WLF 1/4-20	4
1-26	90-1024	BOLT,5/8-11 X 3	1
1-27	301811	SPACER, STEERING LEVER	1
1-28	301782.6	ROD, STEERING	1
1-29	301810	SPACER, STEERING LEVER	1
1-30	64229-06	LOCKNUT, NYLON 5/8-11	1
1-31	64123-16	BLT-HEX 3/8-16X1-1/4	2
1-32	64163-61	WSHR .81X.406X16GA	6
1-33	64229-03	LOCKNUT-NYLON 3/8-16	2
1-34	301786.7	SCRAPER, FRONT ROLLER	1
1-35	301790.6	GUARD, SPROCKET CHAIN	1
1-36	64139-08	BOLT-5/16-18X3/4	2
1-37	64141-6	NUT, 5/16-18	2
1-38	301788	BOLT, CONNECTING	1
1-39	301780	YOKE	1
1-40	99-E19	CASTLE NUT, 1-14 **NON CURRENT** (PART OF 301780 FROM 2018 ON	1
1-41	02-CP0616	COTTER PIN, 3/16 X 2	2
1-42	90-0712	BOLT,7/16-14 X 1-1/2	4
1-43	64163-43	WSHR.443/.454X1X11GA	12
1-44	TR10027	SPROCKET 72T	1
1-45	F220850	JAM NUT 1/2 UNF	4
1-46	F260800	WHEEL NUT 1/2 UNF	4
1-47	KX20035	CASTLE NUT 1-14 UNF	1

ITEM	PART NO.	DESCRIPTION	QTY

FIGURE 2

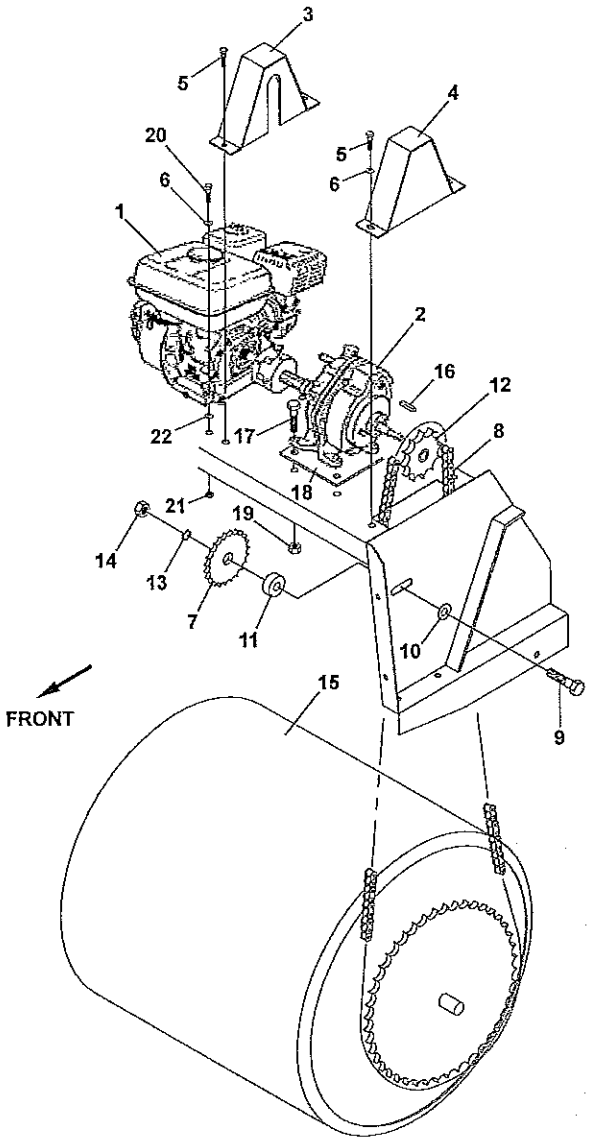

TURF ROLLER

DRIVE PARTS

FIGURE 2

ITEM	PART NO.	DESCRIPTION	QTY
2-1	M5269	ENGINE, HONDA	1
2-2	D8054	TRANSMISSION	1
2-3	301792.7	WLDMT-GUARD COUPLING	1
2-4	301791.7	WLDMT-GUARD	1
2-5	64139-08	BOLT-5/16-18X3/4	4
2-6	64163-02	WSR-.321/.328X.593/.608X11	6
2-7	D1951	SPROCKET, IDLER: #50	1
2-8	115015	CHAIN-ROLLER	1
	81-053	CONNECTOR LINK	1
	81-055	HALF LINK	1
2-9	64123-168	BLT-HEX 5/8-11X2-1/2	1
2-10	94-10	FLAT WASHER, 5/8	1
2-11	301794	SPACER	1
2-12	301855	SPROCKET, REWORK	1
	99-SS09	SET SCREW-5/16 X 3/8	2
2-13	64006-04	LOCKWSHR-HELICAL 5/8	1
2-14	64025-21	NUT-HEX 5/8-11	1
2-15	301778.6	ROLLER-FRONT	1
2-16	64164-10	1/4X1/4X1-1/4 MACH KEY	1
2-17	64123-117	BOLT-HEX 1/2-13X1-1/2	4
2-18	301793.7	PLATE-TRANS BASE	1
2-19	64229-05	LOCKNUT, 1/2-13 NYLON	4
2-20	64123-69	BOLT-5/16-18X1-1/2	4
2-21	64229-02	LOCKNUT-NYLON 5/16-18	4
2-22	99-B62	WASHER	4

ITEM	PART NO.	DESCRIPTION	QTY

REAR FRAME ASSEMBLY

TURF ROLLER

FIGURE 3

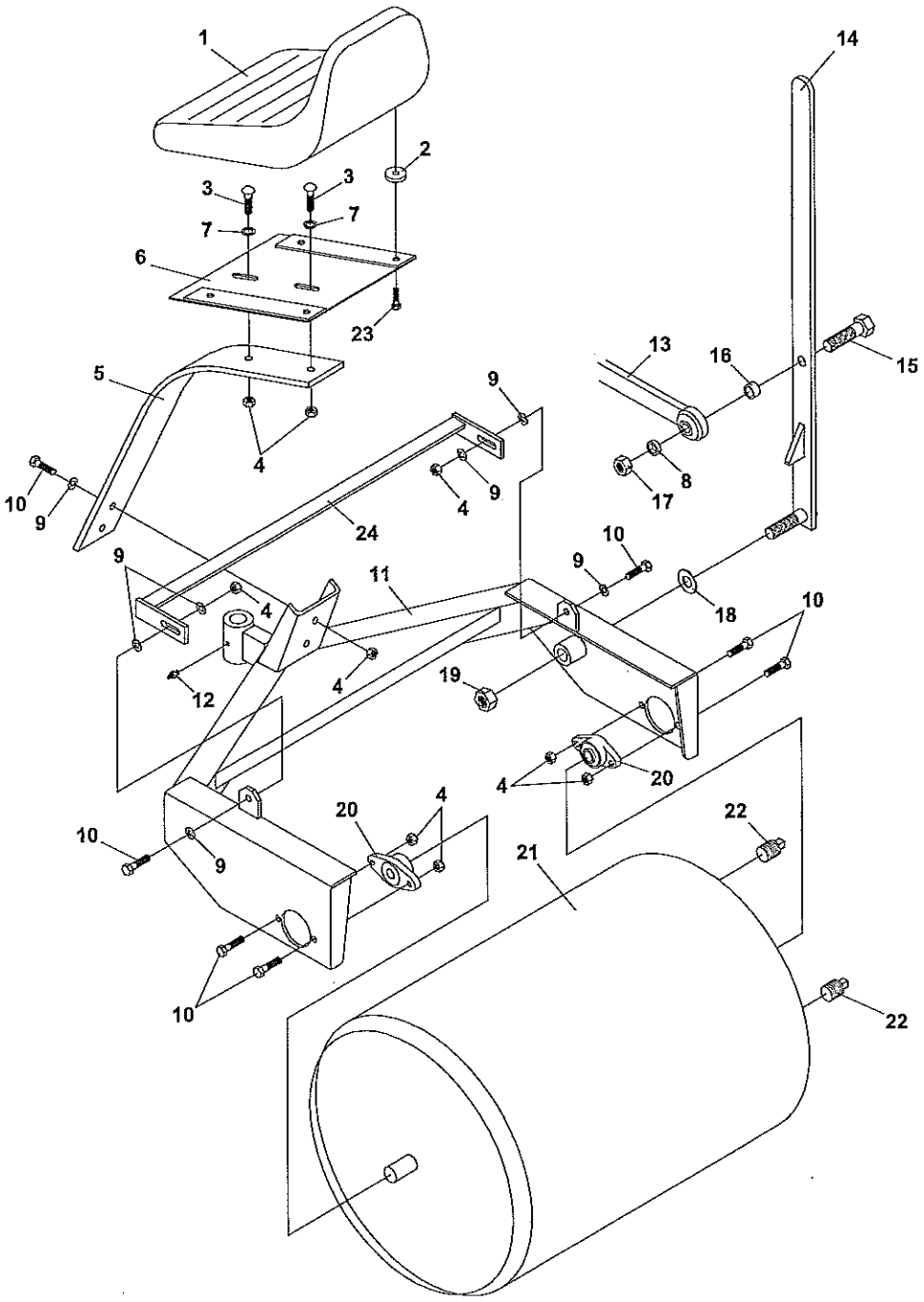

TURF ROLLER

REAR FRAME ASSEMBLY

FIGURE 3

ITEM	PART NO.	DESCRIPTION	QTY
3-1	47-120	SEAT	1
3-2	06-046	SPACER	4
3-3	64018-3	BOLT-3/8-16X1 CRG	2
3-4	64229-03	LOCKNUT-NYLON 3/8-16	10
3-5	301789.7	SUPPORT, SEAT	1
3-6	350002.7	PLATE WELDMENT, SEAT	1
3-7	99-B59	WASHER	2
3-8	301811	SPACER, STEERING LEVER	1
3-9	64163-61	WSHR .81X.406X16GA	8
3-10	64123-16	BLT-HEX 3/8-16X1-1/4	8
3-11	301777.7	WLDMT-FRAME, REAR	1
3-12	29-010	S/B GREASE FITTING	1
3-13	301782.6	ROD, STEERING	1
3-14	301781.6	LEVER, STEERING	1
3-15	90-1024	BOLT,5/8-11 X 3	1
3-16	301810	SPACER, STEERING LEVER	1
3-17	64229-06	LOCKNUT, NYLON 5/8-11	1
3-18	64163-06	WSR-.768/.756X1.25X14G	1
3-19	64229-07	LOCKNUT-NYLON 3/4-10	1
3-20	B0119	BEARING-FLANGE 1"	2
3-21	301779.7	ROLLER	1
3-22	H8030	PLUG	2
3-23	99-K02	BOLT, FLANGE 5/16-18 X 1	4
3-24	301787.7	SCRAPER, REAR ROLLER	1

ITEM	PART NO.	DESCRIPTION	QTY

FIGURE 4

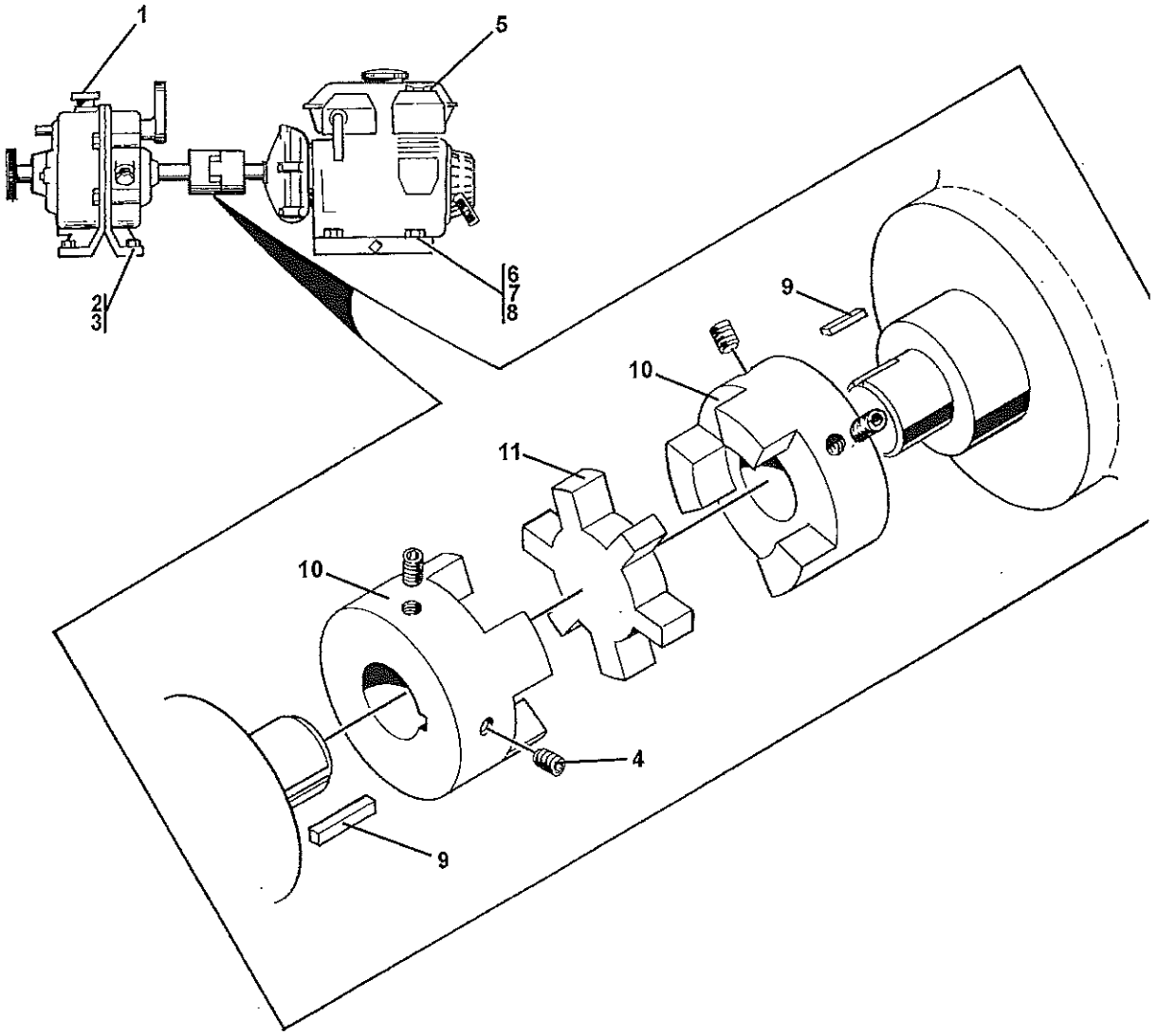

TURF ROLLER

ENGINE & TRANSMISSION DRIVE PARTS

FIGURE 4

ITEM	PART NO.	DESCRIPTION	QTY
4-1	D8054	TRANSMISSION	1
4-2	64123-117	BOLT-HEX 1/2-13X1-1/2	4
4-3	64229-05	LOCKNUT, 1/2-13 NYL	4
4-4	64044-2	SCREW-SET 5/16-18X3/8	4
4-5	M5269	ENGINE, HONDA	1
4-6	64123-69	BOLT-5/16-18X1-1/2	4
4-7	64229-02	LOCKNUT-NYL 5/16-18	4
4-8	64163-02	WSR-.321/.328X.593/.608X11	4
4-9	64164-11	KEY-3/16X3/16X1-1/4 SQ	2
4-10	301656	HALF COUPLING	2
4-11	87-021	INSERT, COUPLING	1

ITEM	PART NO.	DESCRIPTION	QTY

FIGURE 5

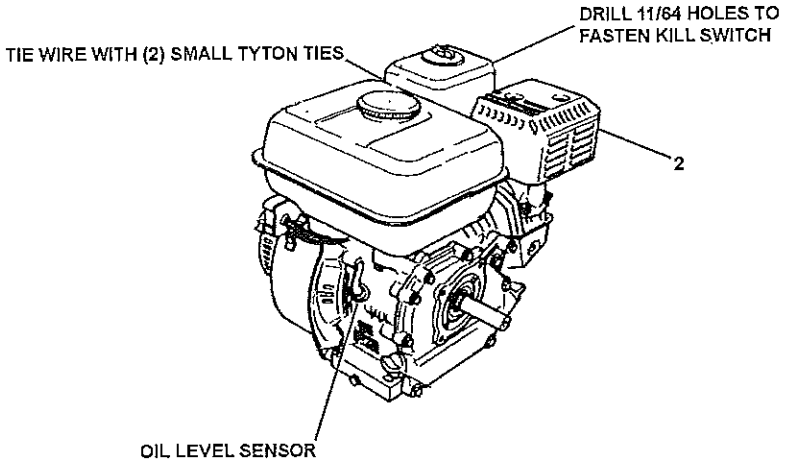
DRILL 11/64 HOLES TO FASTEN KILL SWITCH
TIE WIRE WITH (2) SMALL TYTON TIES
2
OIL LEVEL SENSOR

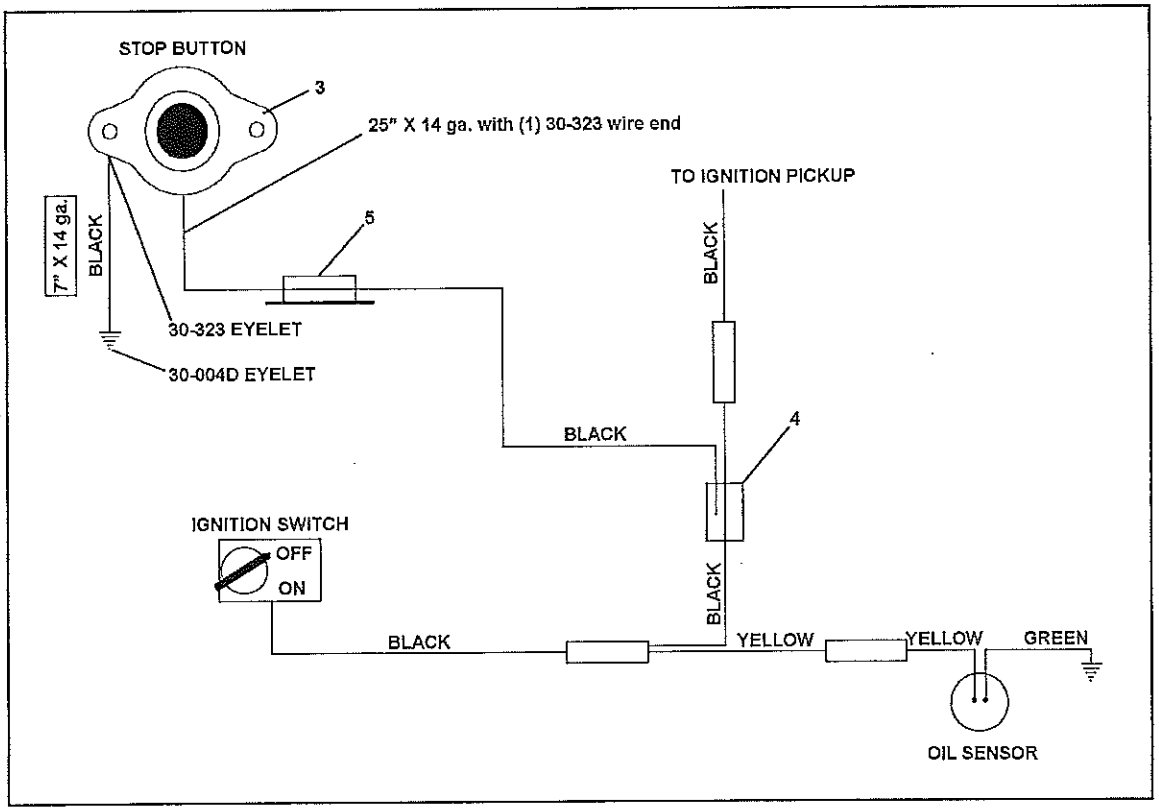
STOP BUTTON
3
25" X 14 ga. with (1) 30-323 wire end
TO IGNITION PICKUP
7" X 14 ga.
BLACK
5
BLACK
30-323 EYELET
30-004D EYELET
BLACK
4
IGNITION SWITCH
OFF
ON
BLACK
BLACK
YELLOW
YELLOW
GREEN
OIL SENSOR

TURF ROLLER

ENGINE WIRING

FIGURE 5

ITEM	PART NO.	DESCRIPTION	QTY
5-1	A31641 (INCLUDES ITEMS 2 - 5)	MODIFICATION-HNDA ENG	1
5-2	M5269	HONDA ENGINE	1
5-3	31-058	SWITCH-STOP BUTTON	1
*	01-009	WASHER, FLAT #8	6
*	64152-20	8-32X1/2 MACH SCREW	2
*	64025-29	NUT-HEX #8-32 KEPS	2
*	30-323	STUDDED EYELET	2
*	30-004D	TERMINAL, 1/4 EYE	1
5-4	30-095	CONNECTOR-QUICK	1
5-5	30-300	CLAMP, ADHESIVE BACKED	1

ITEM	PART NO.	DESCRIPTION	QTY

*** NOT ILLUSTRATED**

TURF ROLLER

FIGURE 6

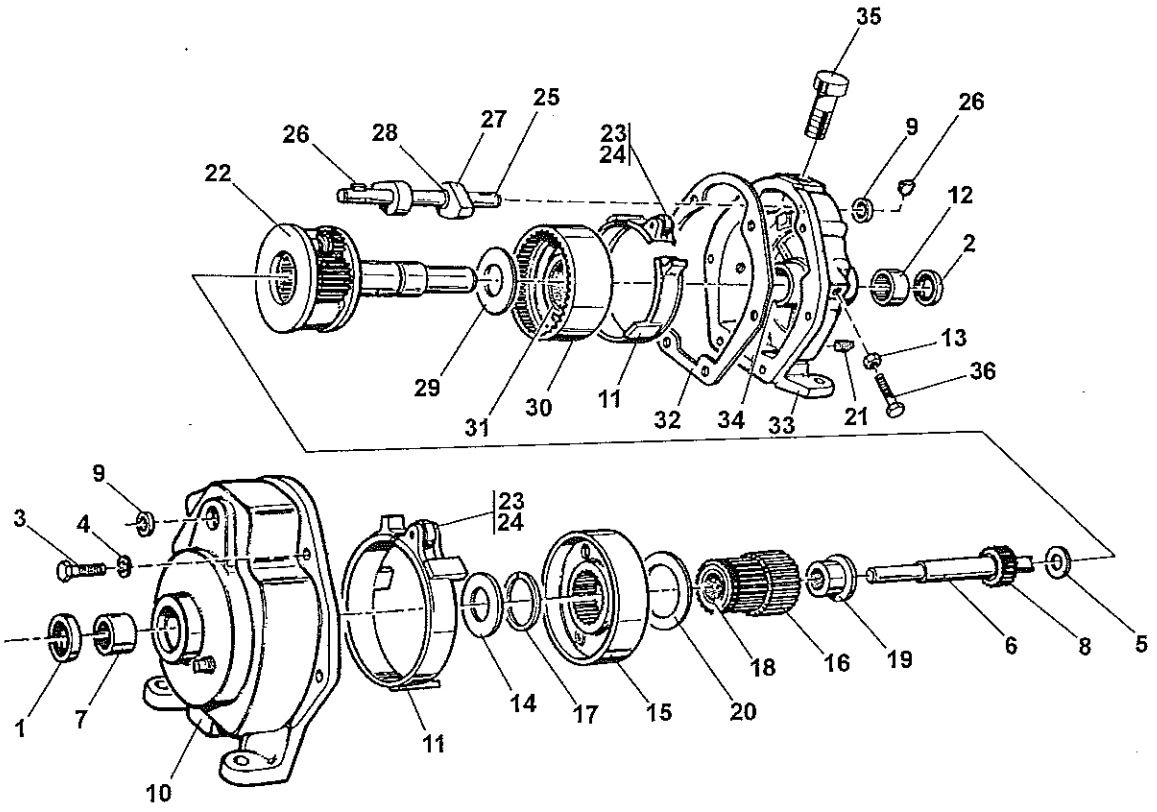

FIGURE 6

ITEM	PART NO.	DESCRIPTION	QTY
6-1	E1046	SEAL	1
6-2	E1047	SEAL	1
6-3	64123-68	BOLT-HEX 5/16-18X1	6
6-4	F2076	WASHER, DISC LOCK	6
6-5	F9080	WASHER	1
6-6	D8068	INPUT SHAFT	1
6-7	B8046	BEARING	1
6-8	D8060	PINION	1
6-9	E1048	SEAL	2
6-10	D8061	INPUT HOUSING	1
6-11	D8075	BRAKE BAND ASSY	2
	D8076	BRAKE BAND	2
	D8077	LINING	2
6-12	B8047	BEARING	1
6-13	64025-09	HEX, NUT 1/2-13	2
6-14	F9081	WASHER	1
6-15	D8074	DRUM	1
6-16	D8062	FORWARD GEAR	1
6-17	G1522	SNAP RING	1
6-18	D8056	BUSHING	1
6-19	M5243	SPACER	1
6-20	F9082	WASHER	1
6-21	H8003	PIPE PLUG	3
6-22	D8072	GEAR CAGE ASSY	1
	G2329	SPLIT PIN	2
	F9085	SCREW	4
	D8065	GEAR CAGE	1
	B8048	BEARING	1
	D8070	SHAFT	1
	B8047	BEARING	1
	G8097	DOWEL	4
	F9084	WASHER	6
	B8049	BEARING	6
	D8066	LONG PINION	2
	D8067	SHORT PINION	2
	D8059	BUSHING	2

ITEM	PART NO.	DESCRIPTION	QTY
6-23	G2342	ROLL PIN	2
6-24	D8073	CAM ROLL	2
6-25	D8069	CROSS SHAFT	1
6-26	G8025	KEY-WOODRUFF	3
6-27	D8071	CAM	1
6-28	G1523	SNAP RING	2
6-29	F9083	BUSHING	1
6-30	D8063	RING GEAR	1
6-31	D8057	BUSHING	1
6-32	E5012	GASKET	1
6-33	D8064	OUTPUT HOUSING	1
6-34	D8058	BUSHING	1
6-35	H8102	BREATHER	1
6-36	F5212	SCREW	1

FIGURE 7

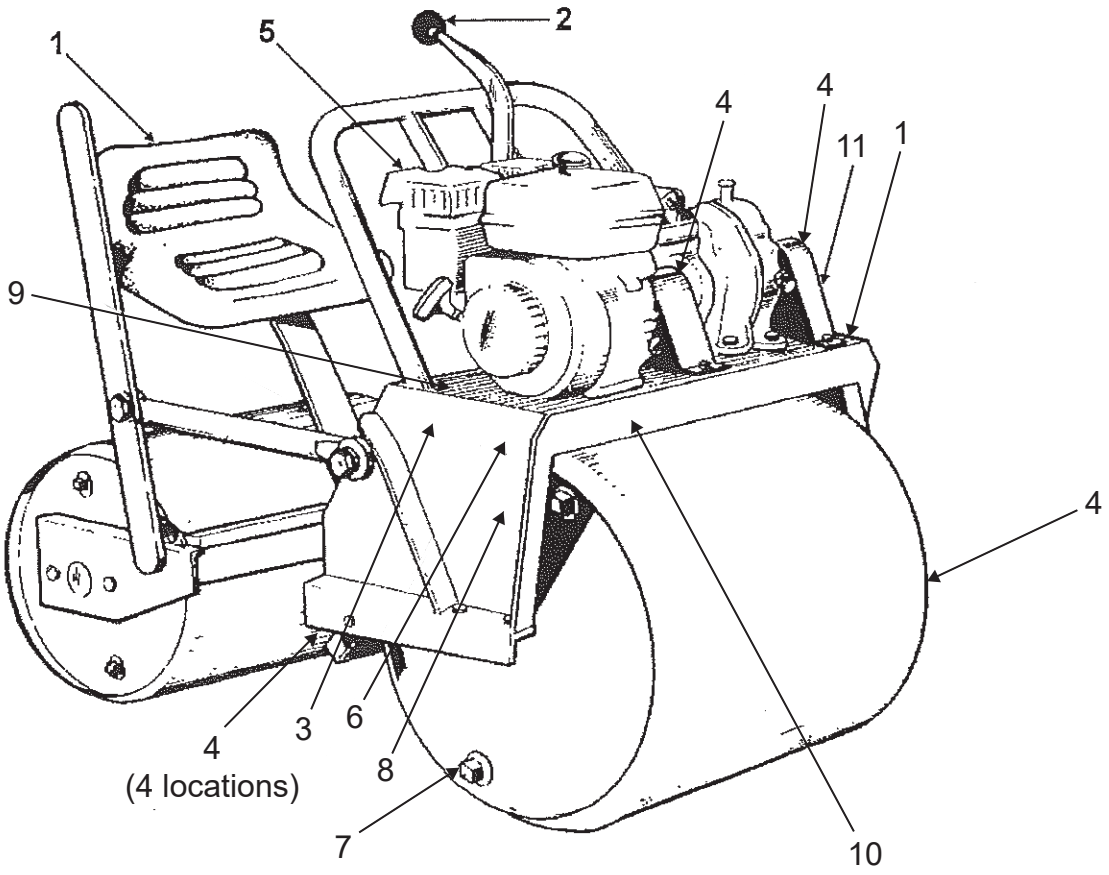

TURF ROLLER

DECALS

FIGURE 7

ITEM	PART NO.	DESCRIPTION	QTY
7-1	D001-400	LBL-BROUWER TR-224 LOGO	2
7-2	301678	LBL- F-N-R	1
7-3	301868	LBL-CAUTION SAFETY INST	1
7-4	D001-054	LBL-CRUSHING HAZARD	7
7-5	301866	LBS-ENGINE STOP	1
7-6	301775	LBL-MAINTENANCE	1
7-7	D001-133	LBL-VENT AIR	1
7-8	301800	LBL-OPERATING INST	1
7-9	D001-S15	LBL- PELIGRO	1
7-10	D001-399	LBL- BROUWER TR-224 FRONT	1
7-11	D001-398	LBL- BROUWER 50 YR.	1

ITEM	PART NO.	DESCRIPTION	QTY

Kesmac Inc.
23324 Woodbine Avenue, Keswick Ontario Canada L4P 0N1
Tel (905) 476-6222 Fax (905) 476-6744
Website www.brouwerkesmac.com Email info@kesmac.com